CLOPAY COMMERCIAL – MODELS VS904, VS904U

STACKING SERIES

VERTISTACK® CLEAR DOOR

The VertiStack® Clear Door utilizes unique, compact stacking sections that take up minimal ceiling space, so it won't interfere with mechanical, electrical or plumbing fixtures. Vertically stacked sections with minimal projection on the wall allow for a clear and open ceiling. The sections can even be recessed into the ceiling if desired. Designed to operate smoothly and quietly, the door will not disturb patrons when operating. Model VS904U features Intellicore® polyurethane insulated rails and stiles.

clopaycommercial.com

COMPACT VERTICAL STACKING ENABLES CLEAN AESTHETIC

EXPAND YOUR FOOTPRINT

VertiStack® Clear Door allows you to bring the outside in. When the door is open, indoor seating can be extended to the outside areas, inviting a state of flow between interior and exterior spaces. When the door is closed, the glass panels let in ample sunlight to offer warm hospitality. The built-in gaskets between sections make the door IECC compliant for air infiltration, keeping patrons comfortable while reducing energy usage.

CLEAR AESTHETICS

VertiStack® Clear Door offers a sleek design with minimal lines and angles. A clean, modern look from inside and out with aesthetic appeal is created since VertiStack® Clear Door has no visible hinges or exposed track or cable. Available in a variety of glass, acrylic and polycarbonate options, VertiStack® Clear Door also offers choices for customizable color and finish, giving designers free rein and flexibility to match or enhance any aesthetic.

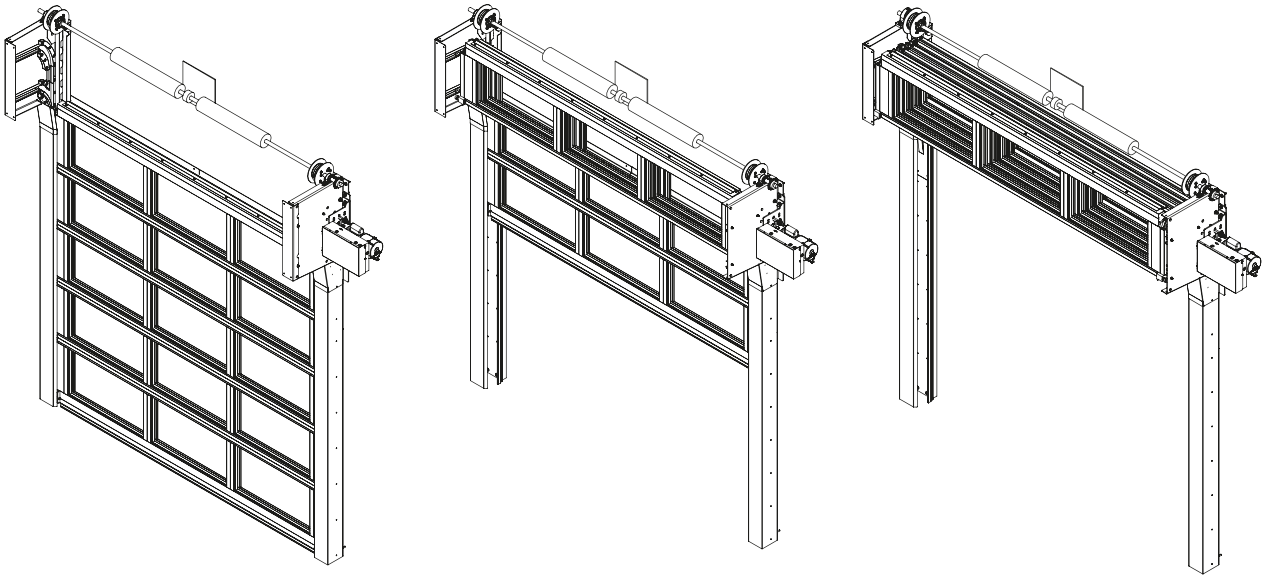

GUIDE CONSTRUCTION

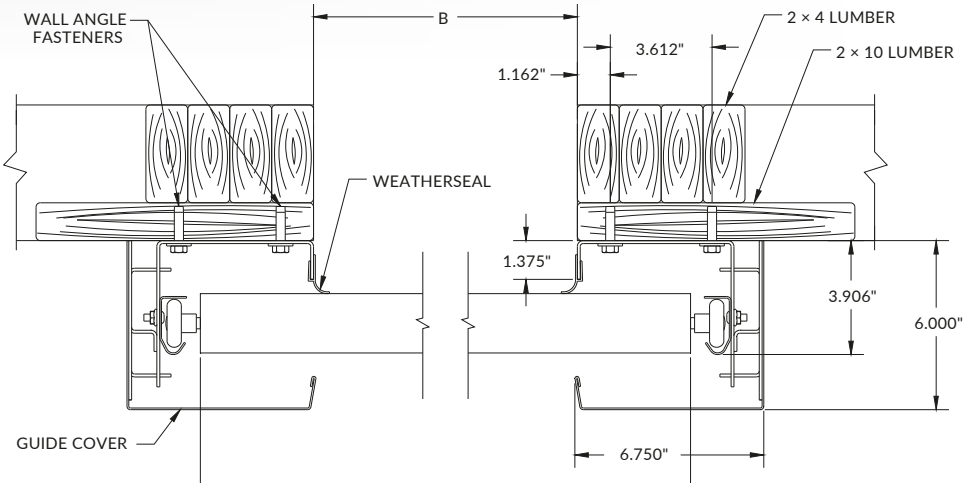

The details and dimensions on this sheet are provided as a rough guide for planning purposes. To request project-specific shop drawings, contact your Clopay customer support or sales representative. Architects and specifiers, visit ***architectdoorhelp.com****.*

CALCULATE NUMBER OF PANELS AND SECTIONS

OPENING WIDTH*	NUMBER OF PANELS
4'6" – 8'8"	2
8'9" – 12'8"	3
12'9" – 15'8"	4
15'9" – 19'8"	5
19'9" – 20'0"	6

** Please note that the door should be ordered 6" wider than the width of the opening.*

DOOR HEIGHT	NUMBER OF SECTIONS
4'0" – 5'8"	3
5'9" – 7'0"	4
7'1" – 8'4"	5
8'5" – 9'8"	6
9'9" – 11'2"	7
11'3" – 12'8"	8
12'9" – 14'0"	9

STANDARD COMPONENT MATERIALS AND FINISHES

1. **TORSION SPRINGS**
   25,000-cycle springs
2. **STRAP SPOOL**
   2" nylon strap in lieu of cable
3. **OPERATOR**
   Side mount shown
   Top and front mounts are also available
4. **GUIDE COVERS**
   Slip-on design with no visible fasteners, powder coated in Matte Black finish
5. **VINYL WEATHER SEAL**
   Clips onto guide channel
   ASTM E283 Air Leakage Rating
6. **MANUAL LOCK**
   Integrated into guide cover (1 per guide)
7. **SECTIONS**
   Clear anodized aluminum (standard)
8. **HEADER CHANNEL**
   For top seal contact, cable management and installation tool
9. **HEAD PLATES**
   Powder coated in Matte Black finish
10. **TOP SEAL**
    Mounts to top section
11. **SHAFT COUPLER**

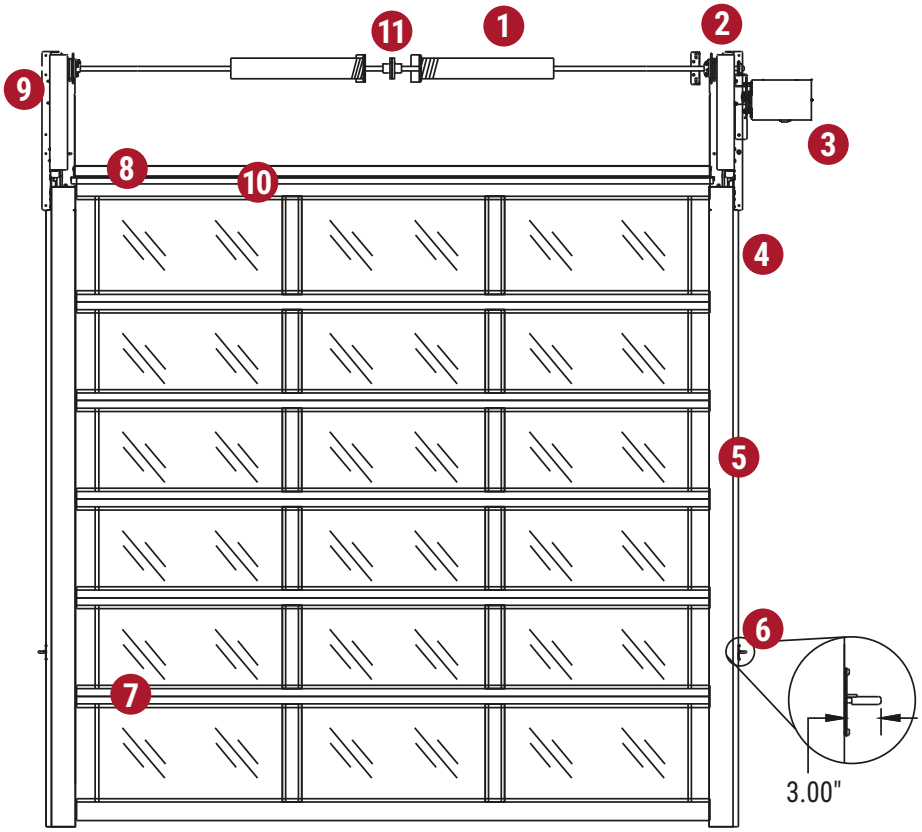

Available with optional spring and motor covers, these new design elements give VertiStack® Clear Doors a more elegant and refined look with even more versatility.

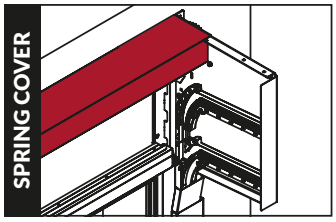

Provides a more streamlined, design-driven look.

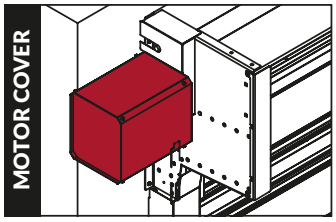

Conceals the operator for an appealing aesthetic.

OPERATION AND STRUCTURAL REQUIREMENTS

Available in motor or manual operation.

The standard motor operator allows the door to be operated with the push of a button. It includes an auxiliary hand chain for emergency use only. The manual hand chain hoist allows the door to be installed in an area without access to electricity. This product is supported by a guide assembly attached to the jamb construction. Header support is required for mounting spring assembly system as would be required with any standard sectional door. Adding an optional hood to a wider door may require hood supports.

For commercial applications and interior mount only.

Door weight not to exceed 1,200 lbs. based on types of glazing and sizes. Consult engineering for details.

AVAILABLE OPTIONS

- A variety of glass and acrylic panels are available, including tempered, insulated, frosted and Low-E options. Glass thickness available in 1/8", 1/4" and 1/2". Tri-wall polycarbonate thickness available in 5/8".
- Anodized finishes: Clear, Black, Bronze, Dark Bronze
- Paint finishes: Chocolate, White, Bronze
- Polyurethane insulated rails and stiles (VS904U)

AVAILABLE SAFETY FEATURES

- Photo eye sensors (concealed by guide covers)
- Wireless sensing edge (only available on doors over 53" high)
- UL325 compliant light curtain
- Strap brake safety system

CERTIFICATIONS AND LISTINGS

- ±25 PSF Design Pressure – WindCode® W4 (doors up to 14'6" wide only)
- Florida Product Approval #FL42132
- Meets ASHRAE® 90.1, Title 24 and IECC® (International Energy Conservation Code) 2021 Section C406.9 Air Infiltration requirements with an independently tested value of 0.2 cfm/ft²
- U-Factor as low as .76

MEASURE THE HEIGHT OF THE OPENING

Dimensions listed below are an estimate. Variations in the opening height, hood, springs, door weight, position of the operator and other additional factors can impact the overall dimensions. Refer to job specific shop drawings for actual dimension requirements.

HEIGHT	A	B	C*	D
4'	26.938"	12.500"	12"	14.500"
5'	30.938"	12.500"	12"	18.500"
6'	29.313"	15.500"	40"	16.875"
7'	32.313"	15.500"	40"	19.875"
8'	30.750"	18.500"	40"	18.313"
9'	29.688"	21.500"	40"	17.250"
10'	28.938"	24.500"	40"	16.500"
11'	30.625"	24.500"	40"	18.188"
12'	29.875"	27.500"	40"	17.438"
13'	29.250"	30.500"	40"	16.813"
14'	30.625"	30.500"	40"	18.188"

**This dimension will be 12" for any door that is greater than 6' and ordered as a counter door.*
***Actual dimensions provided. We recommend 12" of total side clearance from the opening on each side for installation and lock operation.*
† Manual operation available. Please add 5-1/2" to side room requirements to accommodate the hand chain.

CUSTOM-DESIGNED SOLUTIONS

Contact our experienced Architectural Design Support Team for help in customizing our products to fit your specific application at **www.architectdoorhelp.com**

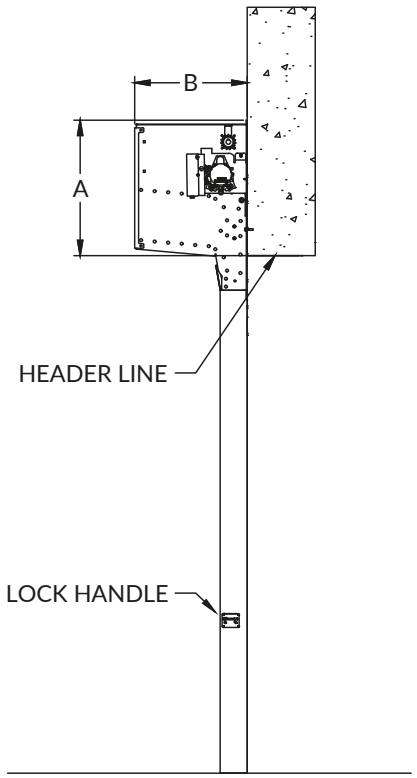

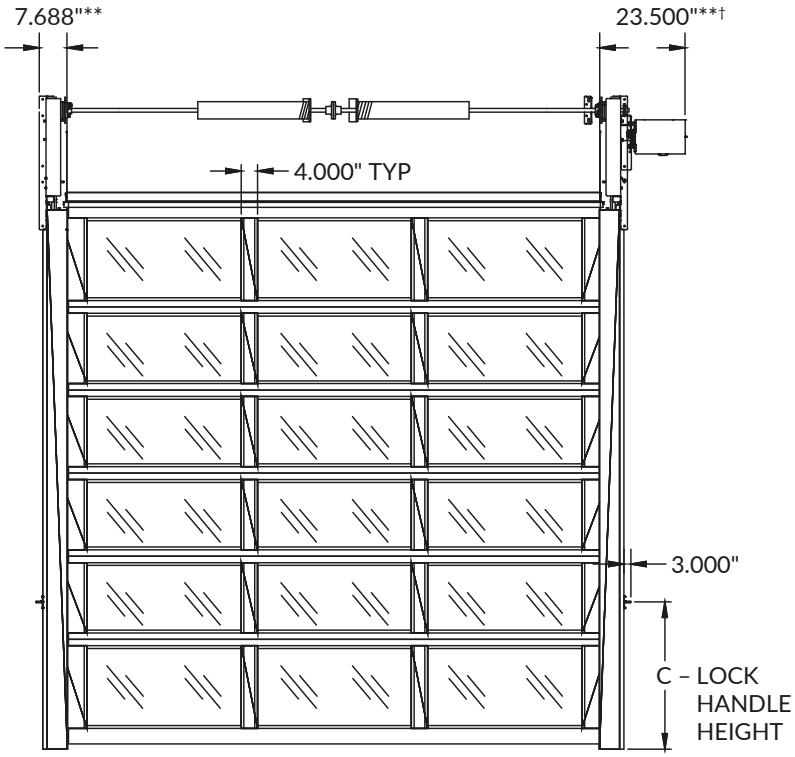

Door weight not to exceed 1,200 lbs. based on types of glazing and sizes. Consult engineering for details.

*To request project-specific shop drawings, contact your Clopay customer support or sales representative. Architects and specifiers, visit **architectdoorhelp.com**.*

For more information on these and other Clopay products, visit **clopaycommercial.com**. Architects and specifiers, visit **architectdoorhelp.com**.

MADE IN **USA**

©2025 Clopay Corporation. All rights reserved.